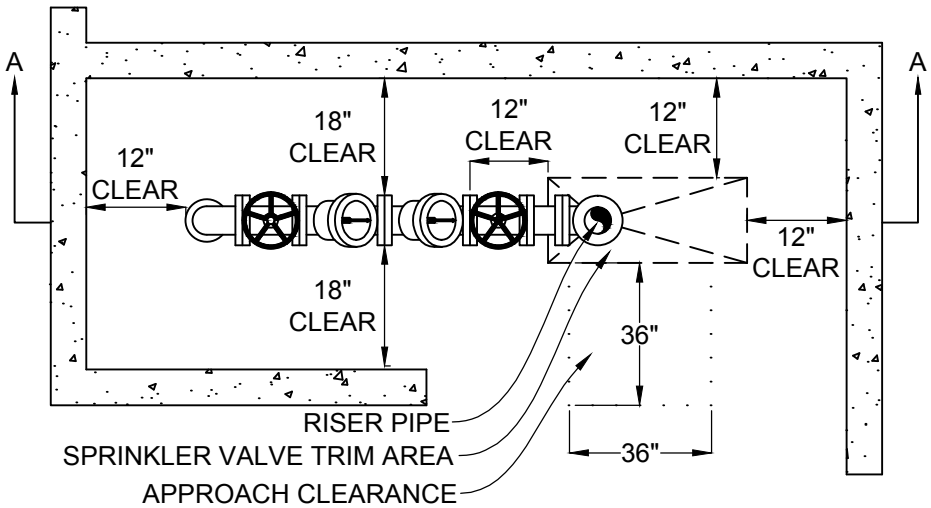

TOP VIEW
N.T.S.

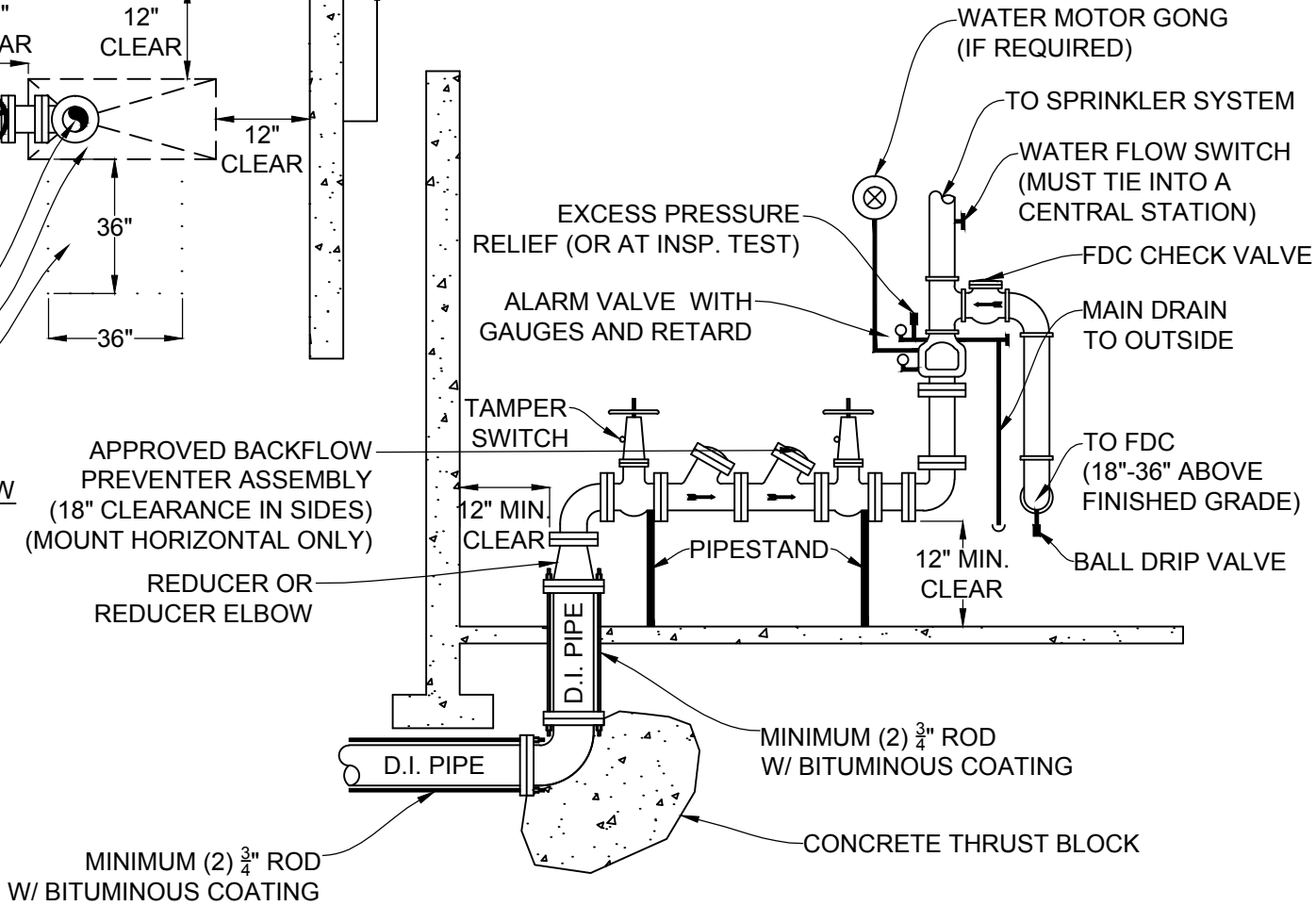

SECTION A-A
N.T.S.

TOWN OF APEX STANDARDS	SPRINKLER RISER & FIRE DEPARTMENT CONNECTION	STD. NO.
EFFECTIVE: NOVEMBER 20, 2007		600.19
		SHEET 1 OF 1