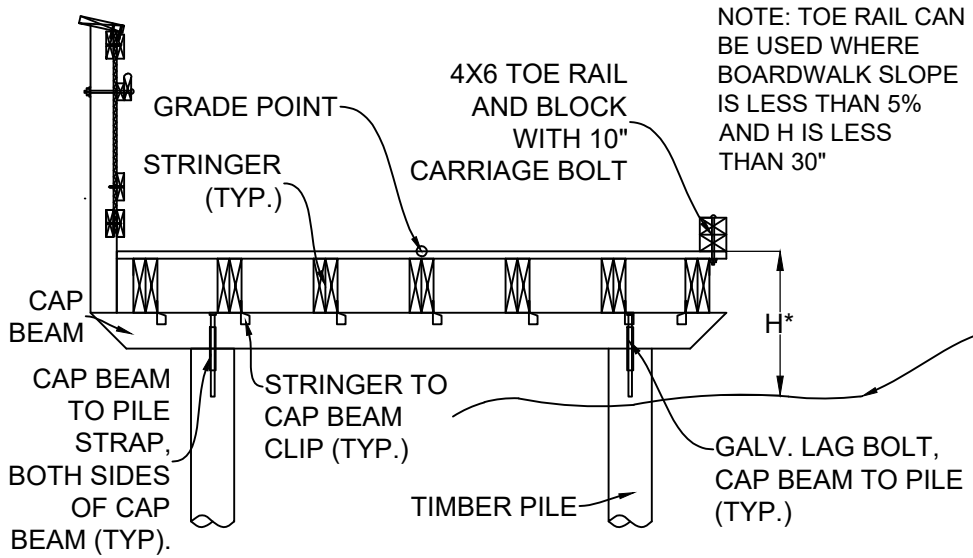

TIMBER BOARDWALK BENT ELEVATION

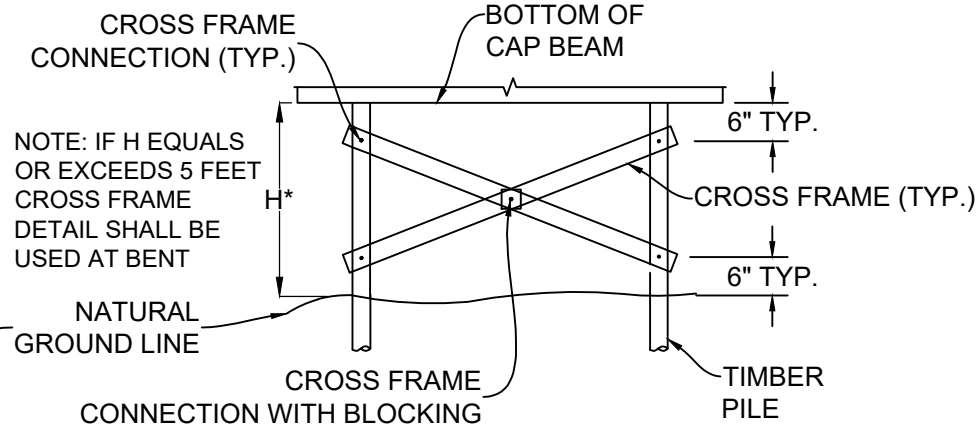

CROSS FRAME DETAIL

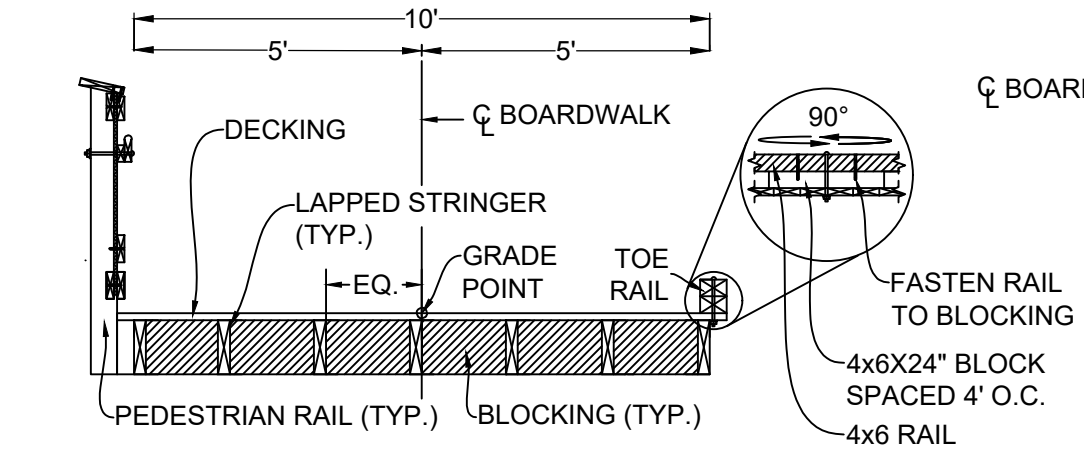

TYPICAL SECTION THROUGH MIDSPAN

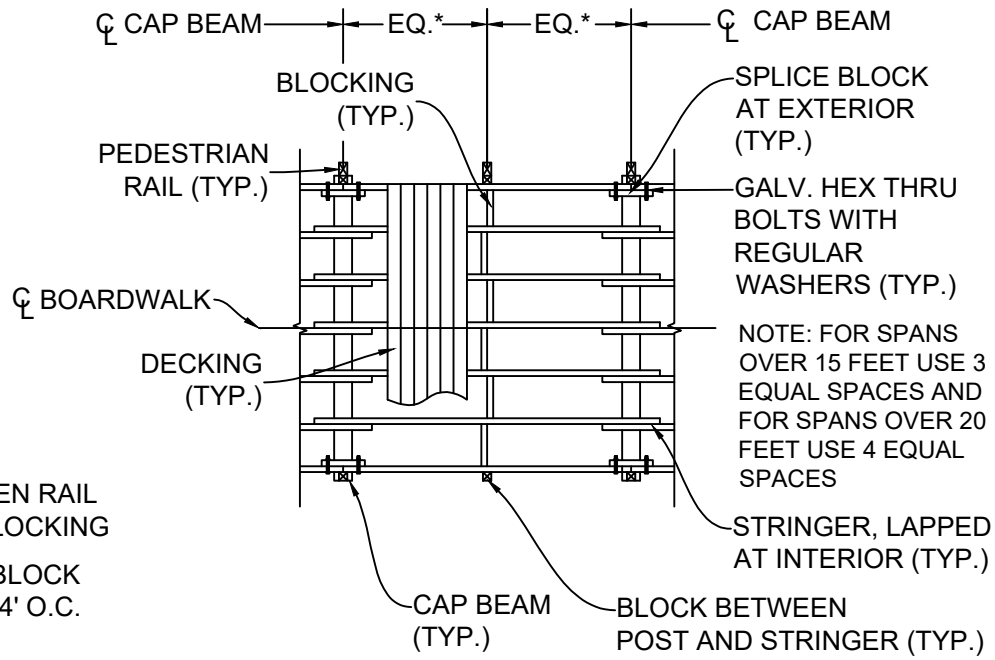

TIMBER BOARDWALK DECK FRAMING PLAN (10 FT SPAN TYP.)

TOWN OF APEX STANDARDS	BOARDWALK	STD. NO.
EFFECTIVE: AUGUST 12, 2025		900.02
		SHEET 2 OF 3